DO NOT SCALE OFF DRAWING. IF IN DOUBT ASK!

WEIGHT: Kg

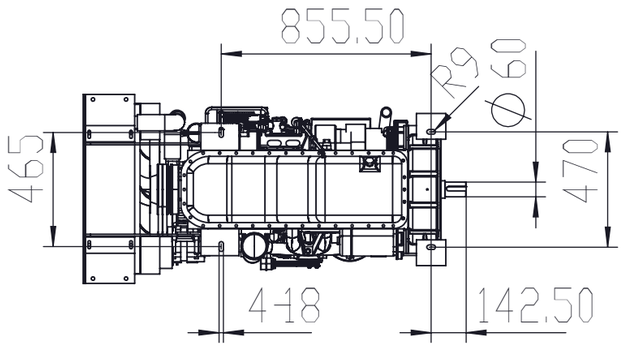

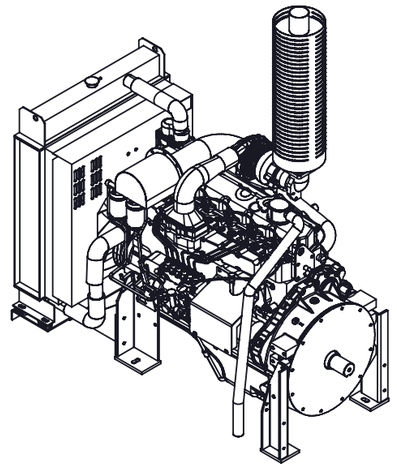

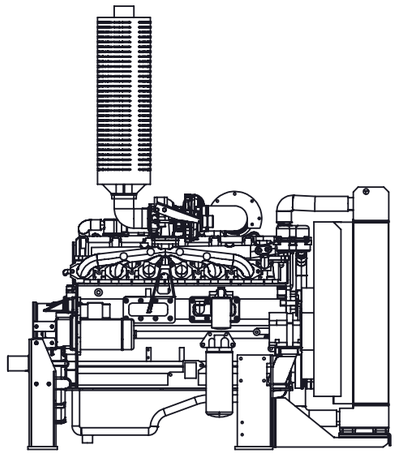

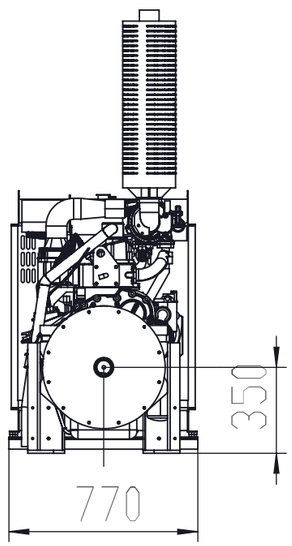

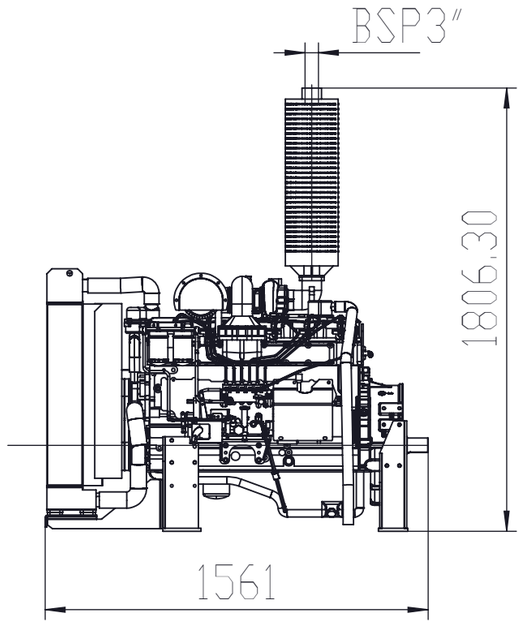

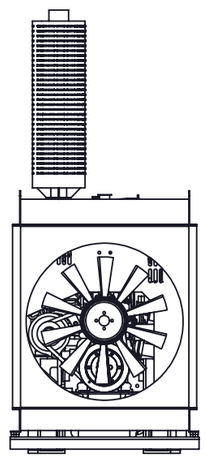

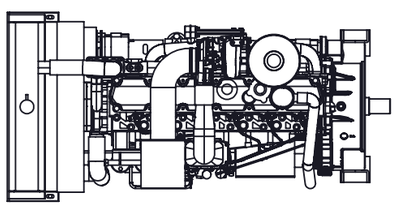

REV.	DESCRIPTION	DRN	DATE	CHK.	DATE.
-	- -	-	-	-	-
-	- -	-	-	-	-
-	- -	-	-	-	-
B	ISSUED FOR MANUFACTURE -		17-11-2026	-	17-11-2026
A	ISSUED FOR APPROVAL -		17-11-2026	-	17-11-2026

TO BE MODIFIED ON SW ONLY

DRAWN SCALE : 1.1

PLOT SCALE : 1:25 @ A3

TOLERANCES

ASSEMBLY DIMENSIONS ± 3 mm
FABRICATED DIMENSIONS ± 2 mm
MACHINING DIMENSIONS ± 0.125 mm
UNLESS OTHERWISE SPECIFIED

SURFACE FINISH:

MATERIAL:

DRN.		17-11-2026
CHK.	-	17-11-2026

WELLING & CROSSLEY PTY LTD

59 EXPORT DRIVE, BROOKLYN VIC 3012
60 ASHFORD AVE, MILPERRA NSW 2214
UNIT 8/235 CAMBOON RD, MALAGA WA 6090
UNIT 2/255 CHRISTENSEN RD, STAPYLTON QLD 4207
EMAIL: sales@wellcross.com.au

THIS DRAWING AND DESIGN REMAIN THE PROPERTY OF WELLING & CROSSLEY PTY. LTD. A.B.N. 61 005 690 273.
THIS DRAWING AND DESIGN CAN NOT BE COPIED OR ALTERED IN ANY WAY WITHOUT PRIOR WRITTEN APPROVAL FROM WELLING & CROSSLEY PTY. LTD.
THIS DRAWING AND ALL COPIES, HARD & SOFT MUST BE RETURNED TO WELLING & CROSSLEY PTY. LTD. UPON REQUEST FROM WELLING & CROSSLEY PTY. LTD.

TITLE : FIRE PUMP DIESEL ENGINE 6D180T RADIATOR GENERAL ARANGMENT

SHEET 1 OF 1

DRG No: 6D180T-RAD-GA

A3

REV B

CAD FILE: