PAINTING/POWDERCOATING

ENGINE: – PAINTED SIGNAL RED
FEET & PANELS: – POWDER COATED SIGNAL RED
HEAT EXCHANGER: – PAINTED SIGNAL RED
MUFFLER: – HIGH TEMP SILVER

OIL SUMP PLUG

IS LOCATED FLUSH WITH SUMP BOTTOM. LUBE OIL MUST BE DRAINED THROUGH DIPSTICK HOLE. ALTERNATELY, DRAIN TO BE EXTENDED BY PUMP PACKAGER

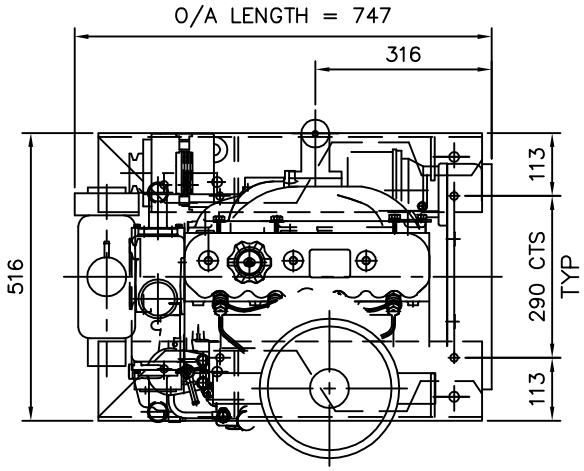

HOUSING SAE 4 & FLYWHEEL SAE 7 1/2

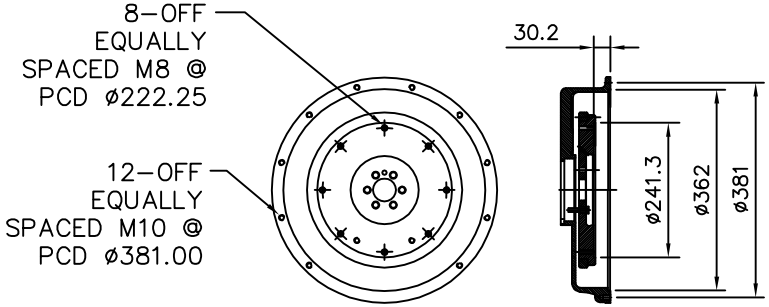

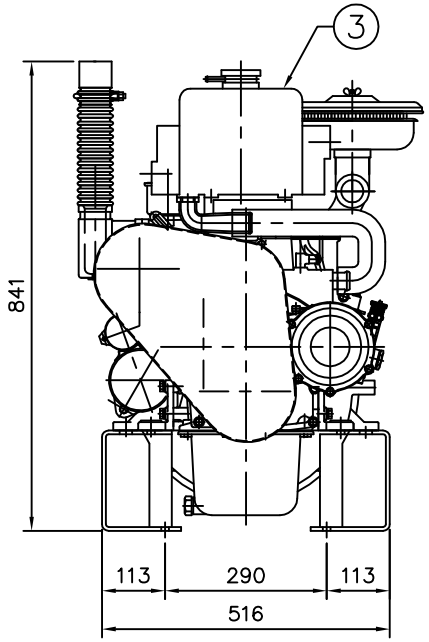

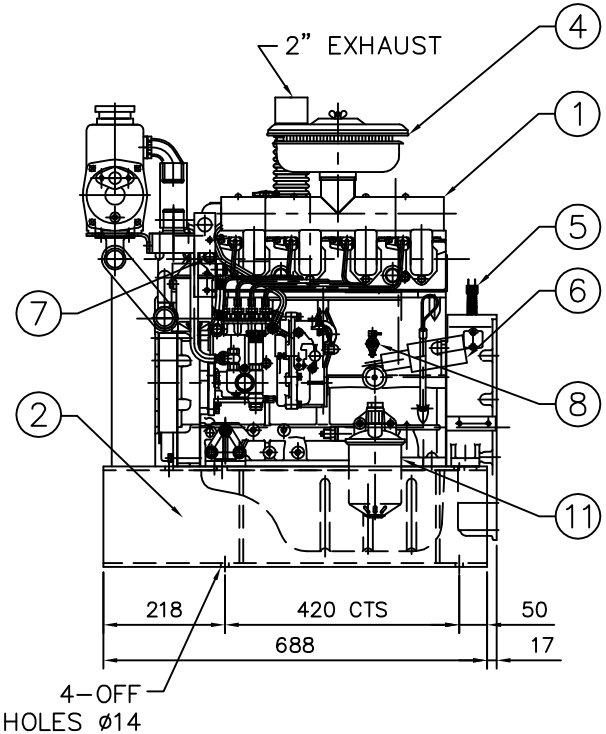

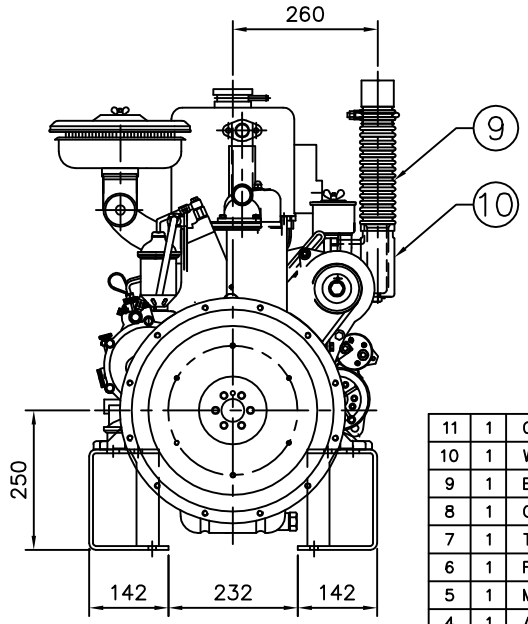

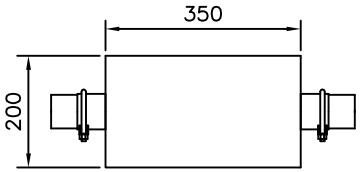

MUFFLER
2" OD PIPES

ITEM	QTY	DESCRIPTION	W&C REF. No.	Wt. Kg.
11	1	OIL FILTER	W&C	–
10	1	WATER TRAP	W&C	–
9	1	EXHAUST FLEX	W&C	–
8	1	OIL PRESSURE SENDER	VDO	–
7	1	TEMP SENDER	VDO	–
6	1	FUEL SOLENOID	W&C	–
5	1	MAGNETIC SPEED PICKUP	W&C	–
4	1	AIR CLEANER	W&C	–
3	1	HEAT EXCHANGER	W&C	–
2	1	SUPPORT FEET & PANELS	W&C	–
1	1	480 DIESEL ENGINE	CROSSLEY	–

REV.	DESCRIPTION	DRN	DATE	CHK.	DATE.
–	–	–	–	–	–
–	–	–	–	–	–
C	REVISED ENGINE DRAWING	R.M.	27.11.13	P.N.L.	27.11.13
B	ISSUED FOR MANUFACTURE	R.M.	08.11.13	P.N.L.	08.11.13
A	ISSUED FOR APPROVAL	R.M.	08.11.13	P.N.L.	08.11.13

TO BE MODIFIED ON CAD ONLY
SCALE :1:10
PLOT SCALE :1:10 @ A3

TOLERANCES
ASSEMBLY DIMENSIONS ± 3 mm
FABRICATED DIMENSIONS ± 2 mm
MACHINING DIMENSIONS ± 0.125 mm
UNLESS OTHERWISE SPECIFIED

DRN.	R.M.	08.11.13
CHK.	P.N.L.	08.11.13
ENG.	P.N.L.	08.11.13
APP.	T.L.	08.11.13

W&C
WELLING & CROSSLEY PTY LTD
59 EXPORT DRIVE BROOKLYN VIC. 3012
UNIT 2/1040 WETHERILL PK NSW 2164
UNIT 5/235 CAMBOON RD MALAGA WA 6090
UNIT 11/1909 IPSWICH ROCKLEA QLD 4106

THIS DRAWING AND DESIGN REMAIN THE PROPERTY OF WELLING & CROSSLEY PTY. LTD. A.B.N. 61 005 690 273. THIS DRAWING AND DESIGN CAN NOT BE COPIED OR ALTERED IN ANY WAY WITHOUT PRIOR WRITTEN APPROVAL FROM WELLING & CROSSLEY PTY. LTD. THIS DRAWING AND ALL COPIES, HARD & SOFT MUST BE RETURNED TO WELLING & CROSSLEY PTY. LTD. UPON REQUEST FROM WELLING & CROSSLEY PTY. LTD.

TITLE : FIRE PUMP DIESEL ENGINE
480 CROSSLEY HEAT EXCHANGER
AH GENERAL ARRANGEMENT

DRG No: 20–480N–006 A3 REV C